ICF group
nienkämper

257 Finchdene Square
Scarborough, Ontario,
Canada M1X 1B9

Tel 416-298-5700 / Fax 416-298-4426
EMAIL : customerservice@nienkamper.com

PLAN VIEW

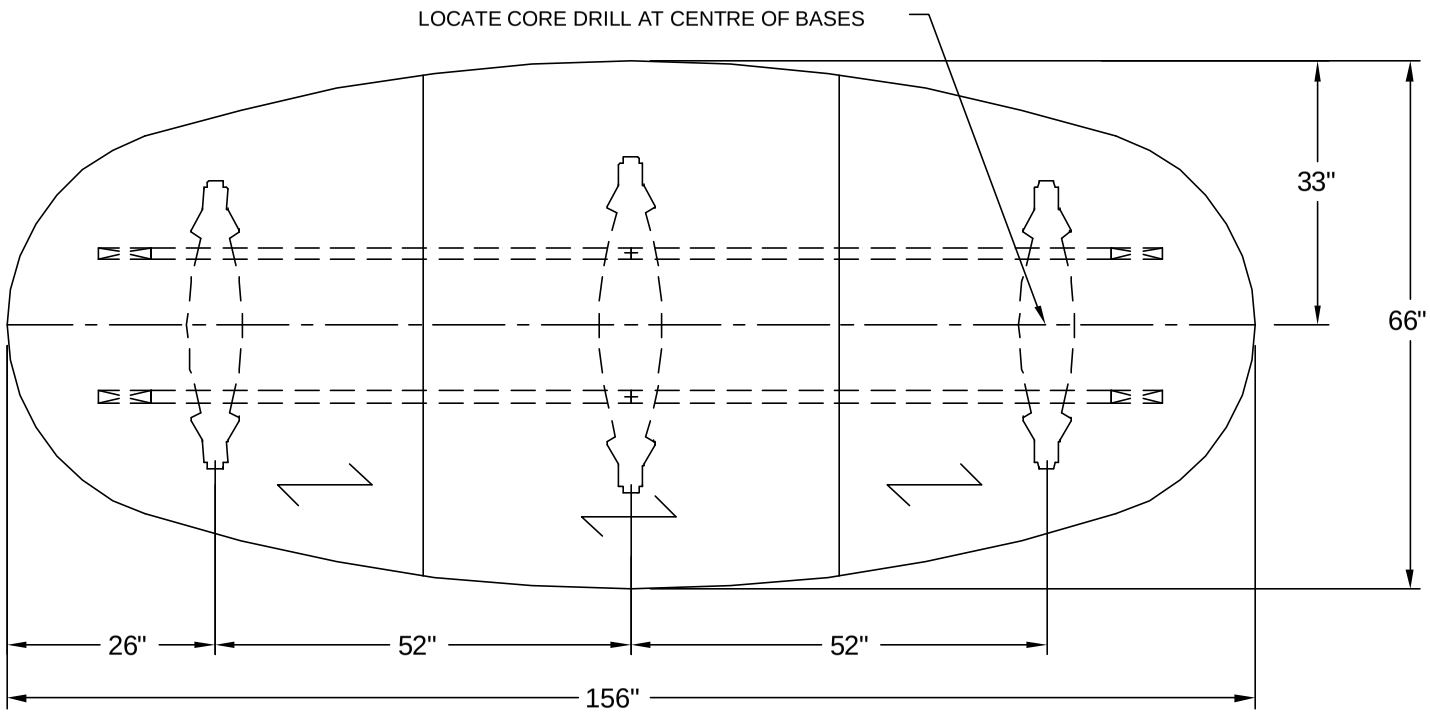

THIS DRAWING IS CONFIDENTIAL AND PROPRIETARY. NO PART OF THIS DRAWING MAY BE COPIED, DISCLOSED OR SENT TO ANY THIRD PARTY OR USED FOR ANY PURPOSE WITHOUT THE EXPRESS WRITTEN AUTHORIZATION OF NIENKAMPER FURNITURE AND ACCESSORIES.